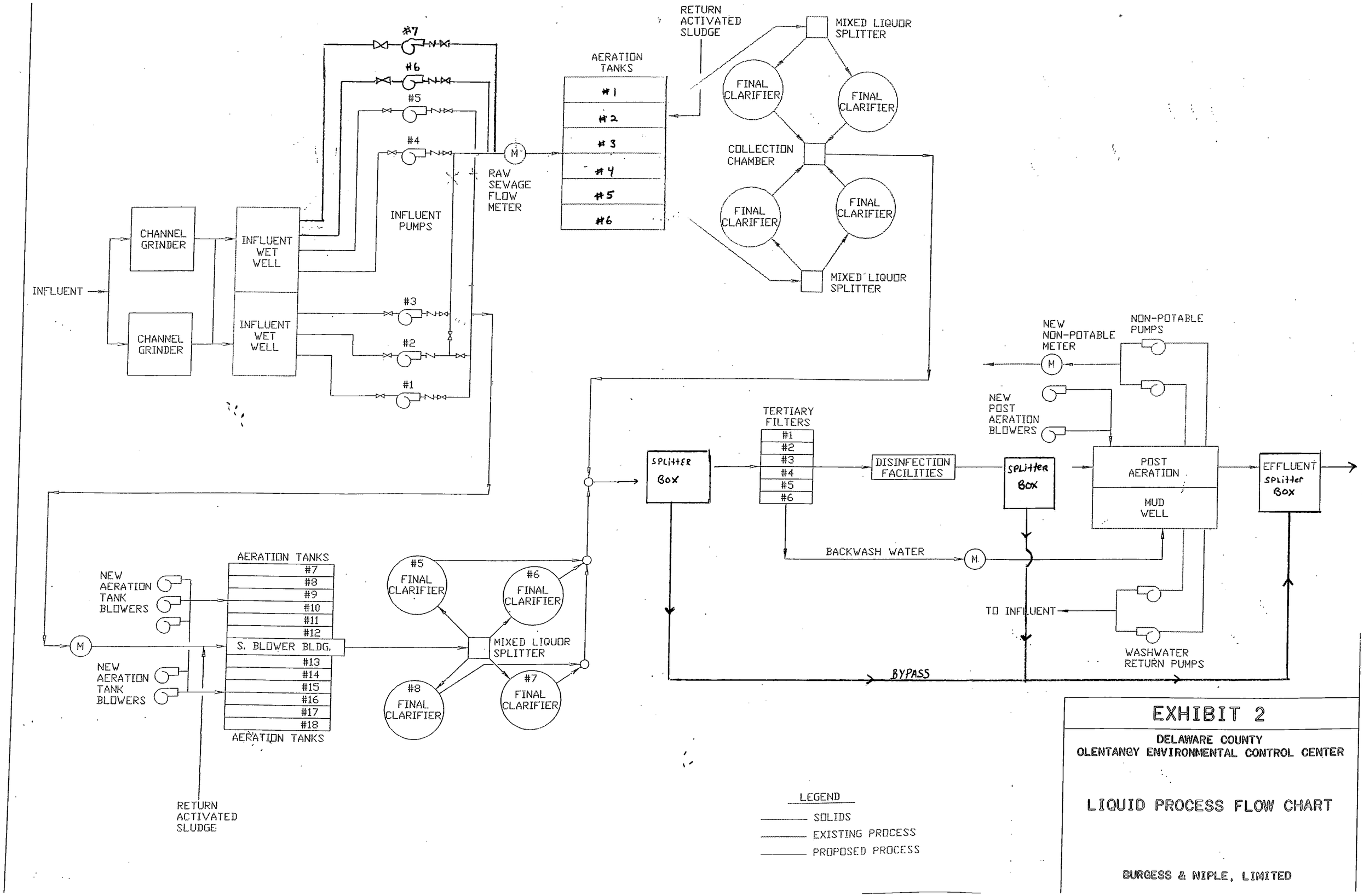


# EXHIBIT 2

**DELAWARE COUNTY**
**OLENTANGY ENVIRONMENTAL CONTROL CENTER**

## LIQUID PROCESS FLOW CHART

**BURGESS & NIPLE, LIMITED**