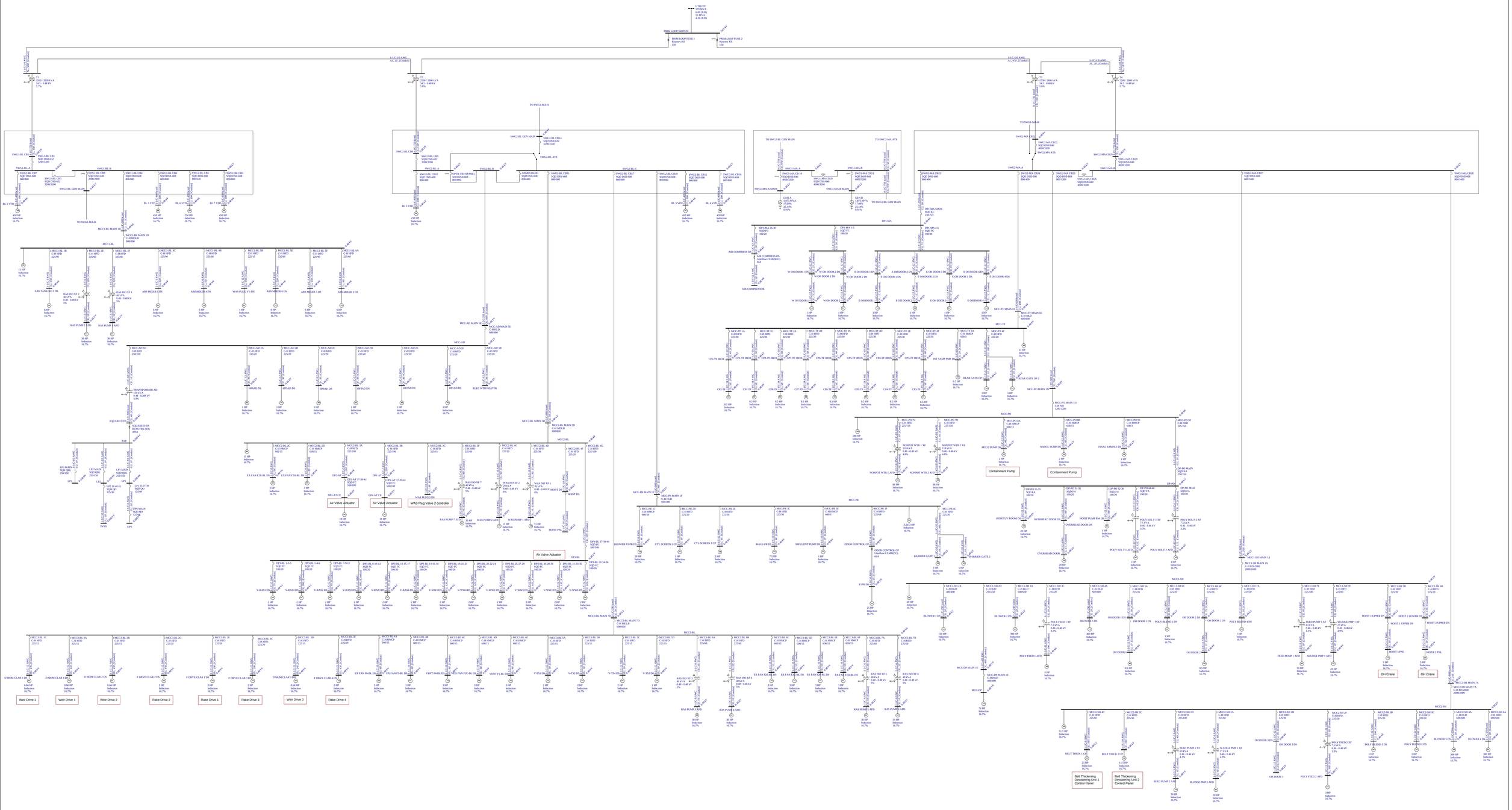
UTILITY
170 MVA
0.01/0.03
35 MVA
4.26/4.26
PRIM LOOP SWITCH
PRIM LOOP FUSE 1
PRIM LOOP FUSE 2
T1
T2
T3
T4
TO SWG1-MA-A
TO SWG1-MA-B
SWG2-BL GEN MAIN
SWG2-BL ATS
SWG2-MA ATS
TO SWG2-BL GEN MAIN
TO SWG2-MA ATS
GEN A
GEN B
DP1-MA
DP1-MA MAIN
MCC1-BL
MCC1-BL MAIN 1D
MCC-AD
MCC-AD MAIN 1E
MCC-TF
MCC-PO
MCC-PR
MCC2-BL
MCC2-BL MAIN 1D
MCC2-MA
MCC2-MA MAIN 1A
MCC2-MA MAIN 7A
MCC2-MA MAIN 7B
MCC2-MA MAIN 1D
MCC2-MA MAIN 1E
MCC2-MA MAIN 1F
MCC2-MA MAIN 1G
MCC2-MA MAIN 1H
MCC2-MA MAIN 1I
MCC2-MA MAIN 1J
MCC2-MA MAIN 1K
MCC2-MA MAIN 1L
MCC2-MA MAIN 1M
MCC2-MA MAIN 1N
MCC2-MA MAIN 1O
MCC2-MA MAIN 1P
MCC2-MA MAIN 1Q
MCC2-MA MAIN 1R
MCC2-MA MAIN 1S
MCC2-MA MAIN 1T
MCC2-MA MAIN 1U
MCC2-MA MAIN 1V
MCC2-MA MAIN 1W
MCC2-MA MAIN 1X
MCC2-MA MAIN 1Y
MCC2-MA MAIN 1Z
MCC2-MA MAIN 1AA
MCC2-MA MAIN 1AB
MCC2-MA MAIN 1AC
MCC2-MA MAIN 1AD
MCC2-MA MAIN 1AE
MCC2-MA MAIN 1AF
MCC2-MA MAIN 1AG
MCC2-MA MAIN 1AH
MCC2-MA MAIN 1AI
MCC2-MA MAIN 1AJ
MCC2-MA MAIN 1AK
MCC2-MA MAIN 1AL
MCC2-MA MAIN 1AM
MCC2-MA MAIN 1AN
MCC2-MA MAIN 1AO
MCC2-MA MAIN 1AP
MCC2-MA MAIN 1AQ
MCC2-MA MAIN 1AR
MCC2-MA MAIN 1AS
MCC2-MA MAIN 1AT
MCC2-MA MAIN 1AU
MCC2-MA MAIN 1AV
MCC2-MA MAIN 1AW
MCC2-MA MAIN 1AX
MCC2-MA MAIN 1AY
MCC2-MA MAIN 1AZ
MCC2-MA MAIN 1BA
MCC2-MA MAIN 1BB
MCC2-MA MAIN 1BC
MCC2-MA MAIN 1BD
MCC2-MA MAIN 1BE
MCC2-MA MAIN 1BF
MCC2-MA MAIN 1BG
MCC2-MA MAIN 1BH
MCC2-MA MAIN 1BI
MCC2-MA MAIN 1BJ
MCC2-MA MAIN 1BK
MCC2-MA MAIN 1BL
MCC2-MA MAIN 1BM
MCC2-MA MAIN 1BN
MCC2-MA MAIN 1BO
MCC2-MA MAIN 1BP
MCC2-MA MAIN 1BQ
MCC2-MA MAIN 1BR
MCC2-MA MAIN 1BS
MCC2-MA MAIN 1BT
MCC2-MA MAIN 1BU
MCC2-MA MAIN 1BV
MCC2-MA MAIN 1BW
MCC2-MA MAIN 1BX
MCC2-MA MAIN 1BY
MCC2-MA MAIN 1BZ
MCC2-MA MAIN 1CA
MCC2-MA MAIN 1CB
MCC2-MA MAIN 1CC
MCC2-MA MAIN 1CD
MCC2-MA MAIN 1CE
MCC2-MA MAIN 1CF
MCC2-MA MAIN 1CG
MCC2-MA MAIN 1CH
MCC2-MA MAIN 1CI
MCC2-MA MAIN 1CJ
MCC2-MA MAIN 1CK
MCC2-MA MAIN 1CL
MCC2-MA MAIN 1CM
MCC2-MA MAIN 1CN
MCC2-MA MAIN 1CO
MCC2-MA MAIN 1CP
MCC2-MA MAIN 1CQ
MCC2-MA MAIN 1CR
MCC2-MA MAIN 1CS
MCC2-MA MAIN 1CT
MCC2-MA MAIN 1CU
MCC2-MA MAIN 1CV
MCC2-MA MAIN 1CW
MCC2-MA MAIN 1CX
MCC2-MA MAIN 1CY
MCC2-MA MAIN 1CZ
MCC2-MA MAIN 1DA
MCC2-MA MAIN 1DB
MCC2-MA MAIN 1DC
MCC2-MA MAIN 1DD
MCC2-MA MAIN 1DE
MCC2-MA MAIN 1DF
MCC2-MA MAIN 1DG
MCC2-MA MAIN 1DH
MCC2-MA MAIN 1DI
MCC2-MA MAIN 1DJ
MCC2-MA MAIN 1DK
MCC2-MA MAIN 1DL
MCC2-MA MAIN 1DM
MCC2-MA MAIN 1DN
MCC2-MA MAIN 1DO
MCC2-MA MAIN 1DP
MCC2-MA MAIN 1DQ
MCC2-MA MAIN 1DR
MCC2-MA MAIN 1DS
MCC2-MA MAIN 1DT
MCC2-MA MAIN 1DU
MCC2-MA MAIN 1DV
MCC2-MA MAIN 1DW
MCC2-MA MAIN 1DX
MCC2-MA MAIN 1DY
MCC2-MA MAIN 1DZ
MCC2-MA MAIN 1EA
MCC2-MA MAIN 1EB
MCC2-MA MAIN 1EC
MCC2-MA MAIN 1ED
MCC2-MA MAIN 1EE
MCC2-MA MAIN 1EF
MCC2-MA MAIN 1EG
MCC2-MA MAIN 1EH
MCC2-MA MAIN 1EI
MCC2-MA MAIN 1EJ
MCC2-MA MAIN 1EK
MCC2-MA MAIN 1EL
MCC2-MA MAIN 1EM
MCC2-MA MAIN 1EN
MCC2-MA MAIN 1EO
MCC2-MA MAIN 1EP
MCC2-MA MAIN 1EQ
MCC2-MA MAIN 1ER
MCC2-MA MAIN 1ES
MCC2-MA MAIN 1ET
MCC2-MA MAIN 1EU
MCC2-MA MAIN 1EV
MCC2-MA MAIN 1EW
MCC2-MA MAIN 1EX
MCC2-MA MAIN 1EY
MCC2-MA MAIN 1EZ
MCC2-MA MAIN 1FA
MCC2-MA MAIN 1FB
MCC2-MA MAIN 1FC
MCC2-MA MAIN 1FD
MCC2-MA MAIN 1FE
MCC2-MA MAIN 1FF
MCC2-MA MAIN 1FG
MCC2-MA MAIN 1FH
MCC2-MA MAIN 1FI
MCC2-MA MAIN 1FJ
MCC2-MA MAIN 1FK
MCC2-MA MAIN 1FL
MCC2-MA MAIN 1FM
MCC2-MA MAIN 1FN
MCC2-MA MAIN 1FO
MCC2-MA MAIN 1FP
MCC2-MA MAIN 1FQ
MCC2-MA MAIN 1FR
MCC2-MA MAIN 1FS
MCC2-MA MAIN 1FT
MCC2-MA MAIN 1FU
MCC2-MA MAIN 1FV
MCC2-MA MAIN 1FW
MCC2-MA MAIN 1FX
MCC2-MA MAIN 1FY
MCC2-MA MAIN 1FZ
MCC2-MA MAIN 1GA
MCC2-MA MAIN 1GB
MCC2-MA MAIN 1GC
MCC2-MA MAIN 1GD
MCC2-MA MAIN 1GE
MCC2-MA MAIN 1GF
MCC2-MA MAIN 1GG
MCC2-MA MAIN 1GH
MCC2-MA MAIN 1GI
MCC2-MA MAIN 1GJ
MCC2-MA MAIN 1GK
MCC2-MA MAIN 1GL
MCC2-MA MAIN 1GM
MCC2-MA MAIN 1GN
MCC2-MA MAIN 1GO
MCC2-MA MAIN 1GP
MCC2-MA MAIN 1GQ
MCC2-MA MAIN 1GR
MCC2-MA MAIN 1GS
MCC2-MA MAIN 1GT
MCC2-MA MAIN 1GU
MCC2-MA MAIN 1GV
MCC2-MA MAIN 1GW
MCC2-MA MAIN 1GX
MCC2-MA MAIN 1GY
MCC2-MA MAIN 1GZ
MCC2-MA MAIN 1HA
MCC2-MA MAIN 1HB
MCC2-MA MAIN 1HC
MCC2-MA MAIN 1HD
MCC2-MA MAIN 1HE
MCC2-MA MAIN 1HF
MCC2-MA MAIN 1HG
MCC2-MA MAIN 1HH
MCC2-MA MAIN 1HI
MCC2-MA MAIN 1HJ
MCC2-MA MAIN 1HK
MCC2-MA MAIN 1HL
MCC2-MA MAIN 1HM
MCC2-MA MAIN 1HN
MCC2-MA MAIN 1HO
MCC2-MA MAIN 1HP
MCC2-MA MAIN 1HQ
MCC2-MA MAIN 1HR
MCC2-MA MAIN 1HS
MCC2-MA MAIN 1HT
MCC2-MA MAIN 1HU
MCC2-MA MAIN 1HV
MCC2-MA MAIN 1HW
MCC2-MA MAIN 1HX
MCC2-MA MAIN 1HY
MCC2-MA MAIN 1HZ
MCC2-MA MAIN 1IA
MCC2-MA MAIN 1IB
MCC2-MA MAIN 1IC
MCC2-MA MAIN 1ID
MCC2-MA MAIN 1IE
MCC2-MA MAIN 1IF
MCC2-MA MAIN 1IG
MCC2-MA MAIN 1IH
MCC2-MA MAIN 1II
MCC2-MA MAIN 1IJ
MCC2-MA MAIN 1IK
MCC2-MA MAIN 1IL
MCC2-MA MAIN 1IM
MCC2-MA MAIN 1IN
MCC2-MA MAIN 1IO
MCC2-MA MAIN 1IP
MCC2-MA MAIN 1IQ
MCC2-MA MAIN 1IR
MCC2-MA MAIN 1IS
MCC2-MA MAIN 1IT
MCC2-MA MAIN 1IU
MCC2-MA MAIN 1IV
MCC2-MA MAIN 1IW
MCC2-MA MAIN 1IX
MCC2-MA MAIN 1IY
MCC2-MA MAIN 1IZ
MCC2-MA MAIN 1JA
MCC2-MA MAIN 1JB
MCC2-MA MAIN 1JC
MCC2-MA MAIN 1JD
MCC2-MA MAIN 1JE
MCC2-MA MAIN 1JF
MCC2-MA MAIN 1JG
MCC2-MA MAIN 1JH
MCC2-MA MAIN 1JI
MCC2-MA MAIN 1JJ
MCC2-MA MAIN 1JK
MCC2-MA MAIN 1JL
MCC2-MA MAIN 1JM
MCC2-MA MAIN 1JN
MCC2-MA MAIN 1JO
MCC2-MA MAIN 1JP
MCC2-MA MAIN 1JQ
MCC2-MA MAIN 1JR
MCC2-MA MAIN 1JS
MCC2-MA MAIN 1JT
MCC2-MA MAIN 1JU
MCC2-MA MAIN 1JV
MCC2-MA MAIN 1JW
MCC2-MA MAIN 1JX
MCC2-MA MAIN 1JY
MCC2-MA MAIN 1JZ
MCC2-MA MAIN 1KA
MCC2-MA MAIN 1KB
MCC2-MA MAIN 1KC
MCC2-MA MAIN 1KD
MCC2-MA MAIN 1KE
MCC2-MA MAIN 1KF
MCC2-MA MAIN 1KG
MCC2-MA MAIN 1KH
MCC2-MA MAIN 1KI
MCC2-MA MAIN 1KJ
MCC2-MA MAIN 1KK
MCC2-MA MAIN 1KL
MCC2-MA MAIN 1KM
MCC2-MA MAIN 1KN
MCC2-MA MAIN 1KO
MCC2-MA MAIN 1KP
MCC2-MA MAIN 1KQ
MCC2-MA MAIN 1KR
MCC2-MA MAIN 1KS
MCC2-MA MAIN 1KT
MCC2-MA MAIN 1KU
MCC2-MA MAIN 1KV
MCC2-MA MAIN 1KW
MCC2-MA MAIN 1KX
MCC2-MA MAIN 1KY
MCC2-MA MAIN 1KZ
MCC2-MA MAIN 1LA
MCC2-MA MAIN 1LB
MCC2-MA MAIN 1LC
MCC2-MA MAIN 1LD
MCC2-MA MAIN 1LE
MCC2-MA MAIN 1LF
MCC2-MA MAIN 1LG
MCC2-MA MAIN 1LH
MCC2-MA MAIN 1LI
MCC2-MA MAIN 1LJ
MCC2-MA MAIN 1LK
MCC2-MA MAIN 1LL
MCC2-MA MAIN 1LM
MCC2-MA MAIN 1LN
MCC2-MA MAIN 1LO
MCC2-MA MAIN 1LP
MCC2-MA MAIN 1LQ
MCC2-MA MAIN 1LR
MCC2-MA MAIN 1LS
MCC2-MA MAIN 1LT
MCC2-MA MAIN 1LU
MCC2-MA MAIN 1LV
MCC2-MA MAIN 1LW
MCC2-MA MAIN 1LX
MCC2-MA MAIN 1LY
MCC2-MA MAIN 1LZ
MCC2-MA MAIN 1MA
MCC2-MA MAIN 1MB
MCC2-MA MAIN 1MC
MCC2-MA MAIN 1MD
MCC2-MA MAIN 1ME
MCC2-MA MAIN 1MF
MCC2-MA MAIN 1MG
MCC2-MA MAIN 1MH
MCC2-MA MAIN 1MI
MCC2-MA MAIN 1MJ
MCC2-MA MAIN 1MK
MCC2-MA MAIN 1ML
MCC2-MA MAIN 1MM
MCC2-MA MAIN 1MN
MCC2-MA MAIN 1MO
MCC2-MA MAIN 1MP
MCC2-MA MAIN 1MQ
MCC2-MA MAIN 1MR
MCC2-MA MAIN 1MS
MCC2-MA MAIN 1MT
MCC2-MA MAIN 1MU
MCC2-MA MAIN 1MV
MCC2-MA MAIN 1MW
MCC2-MA MAIN 1MX
MCC2-MA MAIN 1MY
MCC2-MA MAIN 1MZ
MCC2-MA MAIN 1NA
MCC2-MA MAIN 1NB
MCC2-MA MAIN 1NC
MCC2-MA MAIN 1ND
MCC2-MA MAIN 1NE
MCC2-MA MAIN 1NF
MCC2-MA MAIN 1NG
MCC2-MA MAIN 1NH
MCC2-MA MAIN 1NI
MCC2-MA MAIN 1NJ
MCC2-MA MAIN 1NK
MCC2-MA MAIN 1NL
MCC2-MA MAIN 1NM
MCC2-MA MAIN 1NN
MCC2-MA MAIN 1NO
MCC2-MA MAIN 1NP
MCC2-MA MAIN 1NQ
MCC2-MA MAIN 1NR
MCC2-MA MAIN 1NS
MCC2-MA MAIN 1NT
MCC2-MA MAIN 1NU
MCC2-MA MAIN 1NV
MCC2-MA MAIN 1NW
MCC2-MA MAIN 1NX
MCC2-MA MAIN 1NY
MCC2-MA MAIN 1NZ
MCC2-MA MAIN 1OA
MCC2-MA MAIN 1OB
MCC2-MA MAIN 1OC
MCC2-MA MAIN 1OD
MCC2-MA MAIN 1OE
MCC2-MA MAIN 1OF
MCC2-MA MAIN 1OG
MCC2-MA MAIN 1OH
MCC2-MA MAIN 1OI
MCC2-MA MAIN 1OJ
MCC2-MA MAIN 1OK
MCC2-MA MAIN 1OL
MCC2-MA MAIN 1OM
MCC2-MA MAIN 1ON
MCC2-MA MAIN 1OO
MCC2-MA MAIN 1OP
MCC2-MA MAIN 1OQ
MCC2-MA MAIN 1OR
MCC2-MA MAIN 1OS
MCC2-MA MAIN 1OT
MCC2-MA MAIN 1OU
MCC2-MA MAIN 1OV
MCC2-MA MAIN 1OW
MCC2-MA MAIN 1OX
MCC2-MA MAIN 1OY
MCC2-MA MAIN 1OZ
MCC2-MA MAIN 1PA
MCC2-MA MAIN 1PB
MCC2-MA MAIN 1PC
MCC2-MA MAIN 1PD
MCC2-MA MAIN 1PE
MCC2-MA MAIN 1PF
MCC2-MA MAIN 1PG
MCC2-MA MAIN 1PH
MCC2-MA MAIN 1PI
MCC2-MA MAIN 1PJ
MCC2-MA MAIN 1PK
MCC2-MA MAIN 1PL
MCC2-MA MAIN 1PM
MCC2-MA MAIN 1PN
MCC2-MA MAIN 1PO
MCC2-MA MAIN 1PP
MCC2-MA MAIN 1PQ
MCC2-MA MAIN 1PR
MCC2-MA MAIN 1PS
MCC2-MA MAIN 1PT
MCC2-MA MAIN 1PU
MCC2-MA MAIN 1PV
MCC2-MA MAIN 1PW
MCC2-MA MAIN 1PX
MCC2-MA MAIN 1PY
MCC2-MA MAIN 1PZ
MCC2-MA MAIN 1QA
MCC2-MA MAIN 1QB
MCC2-MA MAIN 1QC
MCC2-MA MAIN 1QD
MCC2-MA MAIN 1QE
MCC2-MA MAIN 1QF
MCC2-MA MAIN 1QG
MCC2-MA MAIN 1QH
MCC2-MA MAIN 1QI
MCC2-MA MAIN 1QJ
MCC2-MA MAIN 1QK
MCC2-MA MAIN 1QL
MCC2-MA MAIN 1QM
MCC2-MA MAIN 1QN
MCC2-MA MAIN 1QO
MCC2-MA MAIN 1QP
MCC2-MA MAIN 1QQ
MCC2-MA MAIN 1QR
MCC2-MA MAIN 1QS
MCC2-MA MAIN 1QT
MCC2-MA MAIN 1QU
MCC2-MA MAIN 1QV
MCC2-MA MAIN 1QW
MCC2-MA MAIN 1QX
MCC2-MA MAIN 1QY
MCC2-MA MAIN 1QZ
MCC2-MA MAIN 1RA
MCC2-MA MAIN 1RB
MCC2-MA MAIN 1RC
MCC2-MA MAIN 1RD
MCC2-MA MAIN 1RE
MCC2-MA MAIN 1RF
MCC2-MA MAIN 1RG
MCC2-MA MAIN 1RH
MCC2-MA MAIN 1RI
MCC2-MA MAIN 1RJ
MCC2-MA MAIN 1RK
MCC2-MA MAIN 1RL
MCC2-MA MAIN 1RM
MCC2-MA MAIN 1RN
MCC2-MA MAIN 1RO
MCC2-MA MAIN 1RP
MCC2-MA MAIN 1RQ
MCC2-MA MAIN 1RR
MCC2-MA MAIN 1RS
MCC2-MA MAIN 1RT
MCC2-MA MAIN 1RU
MCC2-MA MAIN 1RV
MCC2-MA MAIN 1RW
MCC2-MA MAIN 1RX
MCC2-MA MAIN 1RY
MCC2-MA MAIN 1RZ
MCC2-MA MAIN 1SA
MCC2-MA MAIN 1SB
MCC2-MA MAIN 1SC
MCC2-MA MAIN 1SD
MCC2-MA MAIN 1SE
MCC2-MA MAIN 1SF
MCC2-MA MAIN 1SG
MCC2-MA MAIN 1SH
MCC2-MA MAIN 1SI
MCC2-MA MAIN 1SJ
MCC2-MA MAIN 1SK
MCC2-MA MAIN 1SL
MCC2-MA MAIN 1SM
MCC2-MA MAIN 1SN
MCC2-MA MAIN 1SO
MCC2-MA MAIN 1SP
MCC2-MA MAIN 1SQ
MCC2-MA MAIN 1SR
MCC2-MA MAIN 1SS
MCC2-MA MAIN 1ST
MCC2-MA MAIN 1SU
MCC2-MA MAIN 1SV
MCC2-MA MAIN 1SW
MCC2-MA MAIN 1SX
MCC2-MA MAIN 1SY
MCC2-MA MAIN 1SZ
MCC2-MA MAIN 1TA
MCC2-MA MAIN 1TB
MCC2-MA MAIN 1TC
MCC2-MA MAIN 1TD
MCC2-MA MAIN 1TE
MCC2-MA MAIN 1TF
MCC2-MA MAIN 1TG
MCC2-MA MAIN 1TH
MCC2-MA MAIN 1TI
MCC2-MA MAIN 1TJ
MCC2-MA MAIN 1TK
MCC2-MA MAIN 1TL
MCC2-MA MAIN 1TM
MCC2-MA MAIN 1TN
MCC2-MA MAIN 1TO
MCC2-MA MAIN 1TP
MCC2-MA MAIN 1TQ
MCC2-MA MAIN 1TR
MCC2-MA MAIN 1TS
MCC2-MA MAIN 1TT
MCC2-MA MAIN 1TU
MCC2-MA MAIN 1TV
MCC2-MA MAIN 1TW
MCC2-MA MAIN 1TX
MCC2-MA MAIN 1TY
MCC2-MA MAIN 1TZ
MCC2-MA MAIN 1UA
MCC2-MA MAIN 1UB
MCC2-MA MAIN 1UC
MCC2-MA MAIN 1UD
MCC2-MA MAIN 1UE
MCC2-MA MAIN 1UF
MCC2-MA MAIN 1UG
MCC2-MA MAIN 1UH
MCC2-MA MAIN 1UI
MCC2-MA MAIN 1UJ
MCC2-MA MAIN 1UK
MCC2-MA MAIN 1UL
MCC2-MA MAIN 1UM
MCC2-MA MAIN 1UN
MCC2-MA MAIN 1UO
MCC2-MA MAIN 1UP
MCC2-MA MAIN 1UQ
MCC2-MA MAIN 1UR
MCC2-MA MAIN 1US
MCC2-MA MAIN 1UT
MCC2-MA MAIN 1UU
MCC2-MA MAIN 1UV
MCC2-MA MAIN 1UW
MCC2-MA MAIN 1UX
MCC2-MA MAIN 1UY
MCC2-MA MAIN 1UZ
MCC2-MA MAIN 1VA
MCC2-MA MAIN 1VB
MCC2-MA MAIN 1VC
MCC2-MA MAIN 1VD
MCC2-MA MAIN 1VE
MCC2-MA MAIN 1VF
MCC2-MA MAIN 1VG
MCC2-MA MAIN 1VH
MCC2-MA MAIN 1VI
MCC2-MA MAIN 1VJ
MCC2-MA MAIN 1VK
MCC2-MA MAIN 1VL
MCC2-MA MAIN 1VM
MCC2-MA MAIN 1VN
MCC2-MA MAIN 1VO
MCC2-MA MAIN 1VP
MCC2-MA MAIN 1VQ
MCC2-MA MAIN 1VR
MCC2-MA MAIN 1VS
MCC2-MA MAIN 1VT
MCC2-MA MAIN 1VU
MCC2-MA MAIN 1VV
MCC2-MA MAIN 1VW
MCC2-MA MAIN 1VX
MCC2-MA MAIN 1VY
MCC2-MA MAIN 1VZ
MCC2-MA MAIN 1WA
MCC2-MA MAIN 1WB
MCC2-MA MAIN 1WC
MCC2-MA MAIN 1WD
MCC2-MA MAIN 1WE
MCC2-MA MAIN 1WF
MCC2-MA MAIN 1WG
MCC2-MA MAIN 1WH
MCC2-MA MAIN 1WI
MCC2-MA MAIN 1WJ
MCC2-MA MAIN 1WK
MCC2-MA MAIN 1WL
MCC2-MA MAIN 1WM
MCC2-MA MAIN 1WN
MCC2-MA MAIN 1WO
MCC2-MA MAIN 1WP
MCC2-MA MAIN 1WQ
MCC2-MA MAIN 1WR
MCC2-MA MAIN 1WS
MCC2-MA MAIN 1WT
MCC2-MA MAIN 1WU
MCC2-MA MAIN 1WV
MCC2-MA MAIN 1WW
MCC2-MA MAIN 1WX
MCC2-MA MAIN 1WY
MCC2-MA MAIN 1WZ
MCC2-MA MAIN 1XA
MCC2-MA MAIN 1XB
MCC2-MA MAIN 1XC
MCC2-MA MAIN 1XD
MCC2-MA MAIN 1XE
MCC2-MA MAIN 1XF
MCC2-MA MAIN 1XG
MCC2-MA MAIN 1XH
MCC2-MA MAIN 1XI
MCC2-MA MAIN 1XJ
MCC2-MA MAIN 1XK
MCC2-MA MAIN 1XL
MCC2-MA MAIN 1XM
MCC2-MA MAIN 1XN
MCC2-MA MAIN 1XO
MCC2-MA MAIN 1XP
MCC2-MA MAIN 1XQ
MCC2-MA MAIN 1XR
MCC2-MA MAIN 1XS
MCC2-MA MAIN 1XT
MCC2-MA MAIN 1XU
MCC2-MA MAIN 1XV
MCC2-MA MAIN 1XW
MCC2-MA MAIN 1XX
MCC2-MA MAIN 1XY
MCC2-MA MAIN 1XZ
MCC2-MA MAIN 1YA
MCC2-MA MAIN 1YB
MCC2-MA MAIN 1YC
MCC2-MA MAIN 1YD
MCC2-MA MAIN 1YE
MCC2-MA MAIN 1YF
MCC2-MA MAIN 1YG
MCC2-MA MAIN 1YH
MCC2-MA MAIN 1YI
MCC2-MA MAIN 1YJ
MCC2-MA MAIN 1YK
MCC2-MA MAIN 1YL
MCC2-MA MAIN 1YM
MCC2-MA MAIN 1YN
MCC2-MA MAIN 1YO
MCC2-MA MAIN 1YP
MCC2-MA MAIN 1YQ
MCC2-MA MAIN 1YR
MCC2-MA MAIN 1YS
MCC2-MA MAIN 1YT
MCC2-MA MAIN 1YU
MCC2-MA MAIN 1YV
MCC2-MA MAIN 1YW
MCC2-MA MAIN 1YX
MCC2-MA MAIN 1YY
MCC2-MA MAIN 1YZ
MCC2-MA MAIN 1ZA
MCC2-MA MAIN 1ZB
MCC2-MA MAIN 1ZC
MCC2-MA MAIN 1ZD
MCC2-MA MAIN 1ZE
MCC2-MA MAIN 1ZF
MCC2-MA MAIN 1ZG
MCC2-MA MAIN 1ZH
MCC2-MA MAIN 1ZI
MCC2-MA MAIN 1ZJ
MCC2-MA MAIN 1ZK
MCC2-MA MAIN 1ZL
MCC2-MA MAIN 1ZM
MCC2-MA MAIN 1ZN
MCC2-MA MAIN 1ZO
MCC2-MA MAIN 1ZP
MCC2-MA MAIN 1ZQ
MCC2-MA MAIN 1ZR
MCC2-MA MAIN 1ZS
MCC2-MA MAIN 1ZT
MCC2-MA MAIN 1ZU
MCC2-MA MAIN 1ZV
MCC2-MA MAIN 1ZW
MCC2-MA MAIN 1ZX
MCC2-MA MAIN 1ZY
MCC2-MA MAIN 1ZZ
MCC2-MA MAIN 2AA
MCC2-MA MAIN 2AB
MCC2-MA MAIN 2AC
MCC2-MA MAIN 2AD
MCC2-MA MAIN 2AE
MCC2-MA MAIN 2AF
MCC2-MA MAIN 2AG
MCC2-MA MAIN 2AH
MCC2-MA MAIN 2AI
MCC2-MA MAIN 2AJ
MCC2-MA MAIN 2AK
MCC2-MA MAIN 2AL
MCC2-MA MAIN 2AM
MCC2-MA MAIN 2AN
MCC2-MA MAIN 2AO
MCC2-MA MAIN 2AP
MCC2-MA MAIN 2AQ
MCC2-MA MAIN 2AR
MCC2-MA MAIN 2AS
MCC2-MA MAIN 2AT
MCC2-MA MAIN 2AU
MCC2-MA MAIN 2AV
MCC2-MA MAIN 2AW
MCC2-MA MAIN 2AX
MCC2-MA MAIN 2AY
MCC2-MA MAIN 2AZ
MCC2-MA MAIN 2BA
MCC2-MA MAIN 2BB
MCC2-MA MAIN 2BC
MCC2-MA MAIN 2BD
MCC2-MA MAIN 2BE
MCC2-MA MAIN 2BF
MCC2-MA MAIN 2BG
MCC2-MA MAIN 2BH
MCC2-MA MAIN 2BI
MCC2-MA MAIN 2BJ
MCC2-MA MAIN 2BK
MCC2-MA MAIN 2BL
MCC2-MA MAIN 2BM
MCC2-MA MAIN 2BN
MCC2-MA MAIN 2BO
MCC2-MA MAIN 2BP
MCC2-MA MAIN 2BQ
MCC2-MA MAIN 2BR
MCC2-MA MAIN 2BS
MCC2-MA MAIN 2BT
MCC2-MA MAIN 2BU
MCC2-MA MAIN 2BV
MCC2-MA MAIN 2BW
MCC2-MA MAIN 2BX
MCC2-MA MAIN 2BY
MCC2-MA MAIN 2BZ
MCC2-MA MAIN 2CA
MCC2-MA MAIN 2CB
MCC2-MA MAIN 2CC
MCC2-MA MAIN 2CD
MCC2-MA MAIN 2CE
MCC2-MA MAIN 2CF
MCC2-MA MAIN 2CG
MCC2-MA MAIN 2CH
MCC2-MA MAIN 2CI
MCC2-MA MAIN 2CJ
MCC2-MA MAIN 2CK
MCC2-MA MAIN 2CL
MCC2-MA MAIN 2CM
MCC2-MA MAIN 2CN
MCC2-MA MAIN 2CO
MCC2-MA MAIN 2CP
MCC2-MA MAIN 2CQ
MCC2-MA MAIN 2CR
MCC2-MA MAIN 2CS
MCC2-MA MAIN 2CT
MCC2-MA MAIN 2CU
MCC2-MA MAIN 2CV
MCC2-MA MAIN 2CW
MCC2-MA MAIN 2CX
MCC2-MA MAIN 2CY
MCC2-MA MAIN 2CZ
MCC2-MA MAIN 2DA
MCC2-MA MAIN 2DB
MCC2-MA MAIN 2DC
MCC2-MA MAIN 2DD
MCC2-MA MAIN 2DE
MCC2-MA MAIN 2DF
MCC2-MA MAIN 2DG
MCC2-MA MAIN 2DH
MCC2-MA MAIN 2DI
MCC2-MA MAIN 2DJ
MCC2-MA MAIN 2DK
MCC2-MA MAIN 2DL
MCC2-MA MAIN 2DM
MCC2-MA MAIN 2DN
MCC2-MA MAIN 2DO
MCC2-MA MAIN 2DP
MCC2-MA MAIN 2DQ
MCC2-MA MAIN 2DR
MCC2-MA MAIN 2DS
MCC2-MA MAIN 2DT
MCC2-MA MAIN 2DU
MCC2-MA MAIN 2DV
MCC2-MA MAIN 2DW
MCC2-MA MAIN 2DX
MCC2-MA MAIN 2DY
MCC2-MA MAIN 2DZ
MCC2-MA MAIN 2EA
MCC2-MA MAIN 2EB
MCC2-MA MAIN 2EC
MCC2-MA MAIN 2ED
MCC2-MA MAIN 2EE
MCC2-MA MAIN 2EF
MCC2-MA MAIN 2EG
MCC2-MA MAIN 2EH
MCC2-MA MAIN 2EI
MCC2-MA MAIN 2EJ
MCC2-MA MAIN 2EK
MCC2-MA MAIN 2EL
MCC2-MA MAIN 2EM
MCC2-MA MAIN 2EN
MCC2-MA MAIN 2EO
MCC2-MA MAIN 2EP
MCC2-MA MAIN 2EQ
MCC2-MA MAIN 2ER
MCC2-MA MAIN 2ES
MCC2-MA MAIN 2ET
MCC2-MA MAIN 2EU
MCC2-MA MAIN 2EV
MCC2-MA MAIN 2EW
MCC2-MA MAIN 2EX
MCC2-MA MAIN 2EY
MCC2-MA MAIN 2EZ
MCC2-MA MAIN 2FA
MCC2-MA MAIN 2FB
MCC2-MA MAIN 2FC
MCC2-MA MAIN 2FD
MCC2-MA MAIN 2FE
MCC2-MA MAIN 2FF
MCC2-MA MAIN 2FG
MCC2-MA MAIN 2FH
MCC2-MA MAIN 2FI
MCC2-MA MAIN 2FJ
MCC2-MA MAIN 2FK
MCC2-MA MAIN 2FL
MCC2-MA MAIN 2FM
MCC2-MA MAIN 2FN
MCC2-MA MAIN 2FO
MCC2-MA MAIN 2FP
MCC2-MA MAIN 2FQ
MCC2-MA MAIN 2FR
MCC2-MA MAIN 2FS
MCC2-MA MAIN 2FT
MCC2-MA MAIN 2FU
MCC2-MA MAIN 2FV
MCC2-MA MAIN 2FW
MCC2-MA MAIN 2FX
MCC2-MA MAIN 2FY
MCC2-MA MAIN 2FZ
MCC2-MA MAIN 2GA
MCC2-MA MAIN 2GB
MCC2-MA MAIN 2GC
MCC2-MA MAIN 2GD
MCC2-MA MAIN 2GE
MCC2-MA MAIN 2GF
MCC2-MA MAIN 2GG
MCC2-MA MAIN 2GH
MCC2-MA MAIN 2GI
MCC2-MA MAIN 2GJ
MCC2-MA MAIN 2GK
MCC2-MA MAIN 2GL
MCC2-MA MAIN 2GM
MCC2-MA MAIN 2GN
MCC2-MA MAIN 2GO
MCC2-MA MAIN 2GP
MCC2-MA MAIN 2GQ
MCC2-MA MAIN 2GR
MCC2-MA MAIN 2GS
MCC2-MA MAIN 2GT
MCC2-MA MAIN 2GU
MCC2-MA MAIN 2GV
MCC2-MA MAIN 2GW
MCC2-MA MAIN 2GX
MCC2-MA MAIN 2GY
MCC2-MA MAIN 2GZ
MCC2-MA MAIN 2HA
MCC2-MA MAIN 2HB
MCC2-MA MAIN 2HC
MCC2-MA MAIN 2HD
MCC2-MA MAIN 2HE
MCC2-MA MAIN 2HF
MCC2-MA MAIN 2HG
MCC2-MA MAIN 2HH
MCC2-MA MAIN 2HI
MCC2-MA MAIN 2HJ
MCC2-MA MAIN 2HK
MCC2-MA MAIN 2HL
MCC2-MA MAIN 2HM
MCC2-MA MAIN 2HN
MCC2-MA MAIN 2HO
MCC2-MA MAIN 2HP
MCC2-MA MAIN 2HQ
MCC2-MA MAIN 2HR
MCC2-MA MAIN 2HS
MCC2-MA MAIN 2HT
MCC2-MA MAIN 2HU
MCC2-MA MAIN 2HV
MCC2-MA MAIN 2HW
MCC2-MA MAIN 2HX
MCC2-MA MAIN 2HY
MCC2-MA MAIN 2HZ
MCC2-MA MAIN 2IA
MCC2-MA MAIN 2IB
MCC2-MA MAIN 2IC
MCC2-MA MAIN 2ID
MCC2-MA MAIN 2IE
MCC2-MA MAIN 2IF
MCC2-MA MAIN 2IG
MCC2-MA MAIN 2IH
MCC2-MA MAIN 2II
MCC2-MA MAIN 2IJ
MCC2-MA MAIN 2IK
MCC2-MA MAIN 2IL
MCC2-MA MAIN 2IM
MCC2-MA MAIN 2IN
MCC2-MA MAIN 2IO
MCC2-MA MAIN 2IP
MCC2-MA MAIN 2IQ
MCC2-MA MAIN 2IR
MCC2-MA MAIN 2IS
MCC2-MA MAIN 2IT
MCC2-MA MAIN 2IU
MCC2-MA MAIN 2IV
MCC2-MA MAIN 2IW
MCC2-MA MAIN 2IX
MCC2-MA MAIN 2IY
MCC2-MA MAIN 2IZ
MCC2-MA MAIN 2JA
MCC2-MA MAIN 2JB
MCC2-MA MAIN 2JC
MCC2-MA MAIN 2JD
MCC2-MA MAIN 2JE
MCC2-MA MAIN 2JF
MCC2-MA MAIN 2JG
MCC2-MA MAIN 2JH
MCC2-MA MAIN 2JI
MCC2-MA MAIN 2JJ
MCC2-MA MAIN 2JK
MCC2-MA MAIN 2JL
MCC2-MA MAIN 2JM
MCC2-MA MAIN 2JN
MCC2-MA MAIN 2JO
MCC2-MA MAIN 2JP
MCC2-MA MAIN 2JQ
MCC2-MA MAIN 2JR
MCC2-MA MAIN 2JS
MCC2-MA MAIN 2JT
MCC2-MA MAIN 2JU
MCC2-MA MAIN 2JV
MCC2-MA MAIN 2JW
MCC2-MA MAIN 2JX
MCC2-MA MAIN 2JY
MCC2-MA MAIN 2JZ
MCC2-MA MAIN 2KA
MCC2-MA MAIN 2KB
MCC2-MA MAIN 2KC
MCC2-MA MAIN 2KD
MCC2-MA MAIN 2KE
MCC2-MA MAIN 2KF
MCC2-MA MAIN 2KG
MCC2-M