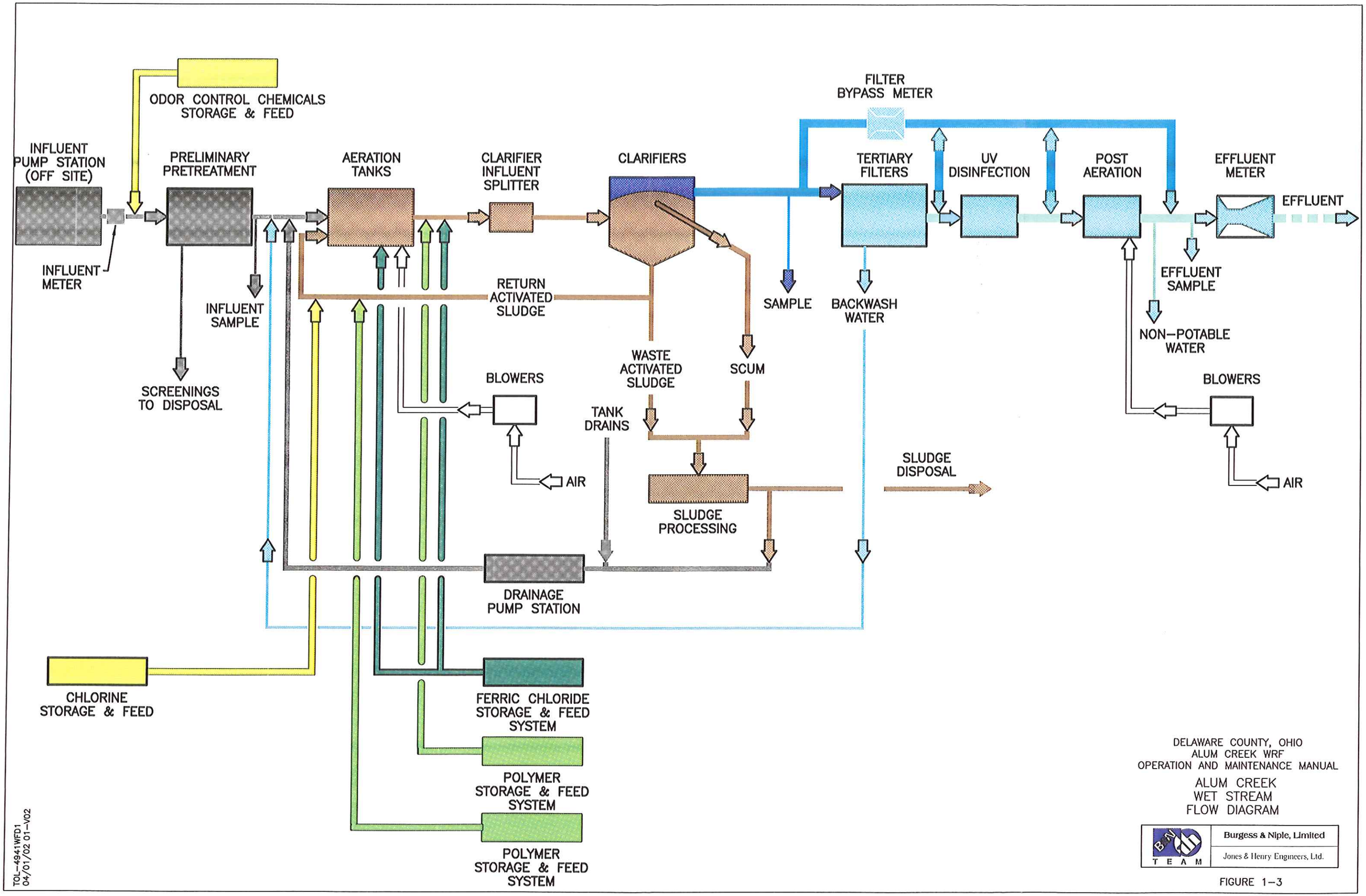

DELAWARE COUNTY, OHIO
ALUM CREEK WRF
OPERATION AND MAINTENANCE MANUAL

ALUM CREEK
WET STREAM
FLOW DIAGRAM

Burgess & Niple, Limited
Jones & Henry Engineers, Ltd.
TEAM

FIGURE 1–3

TOL–4941WFD1
04/01/02 01–V02